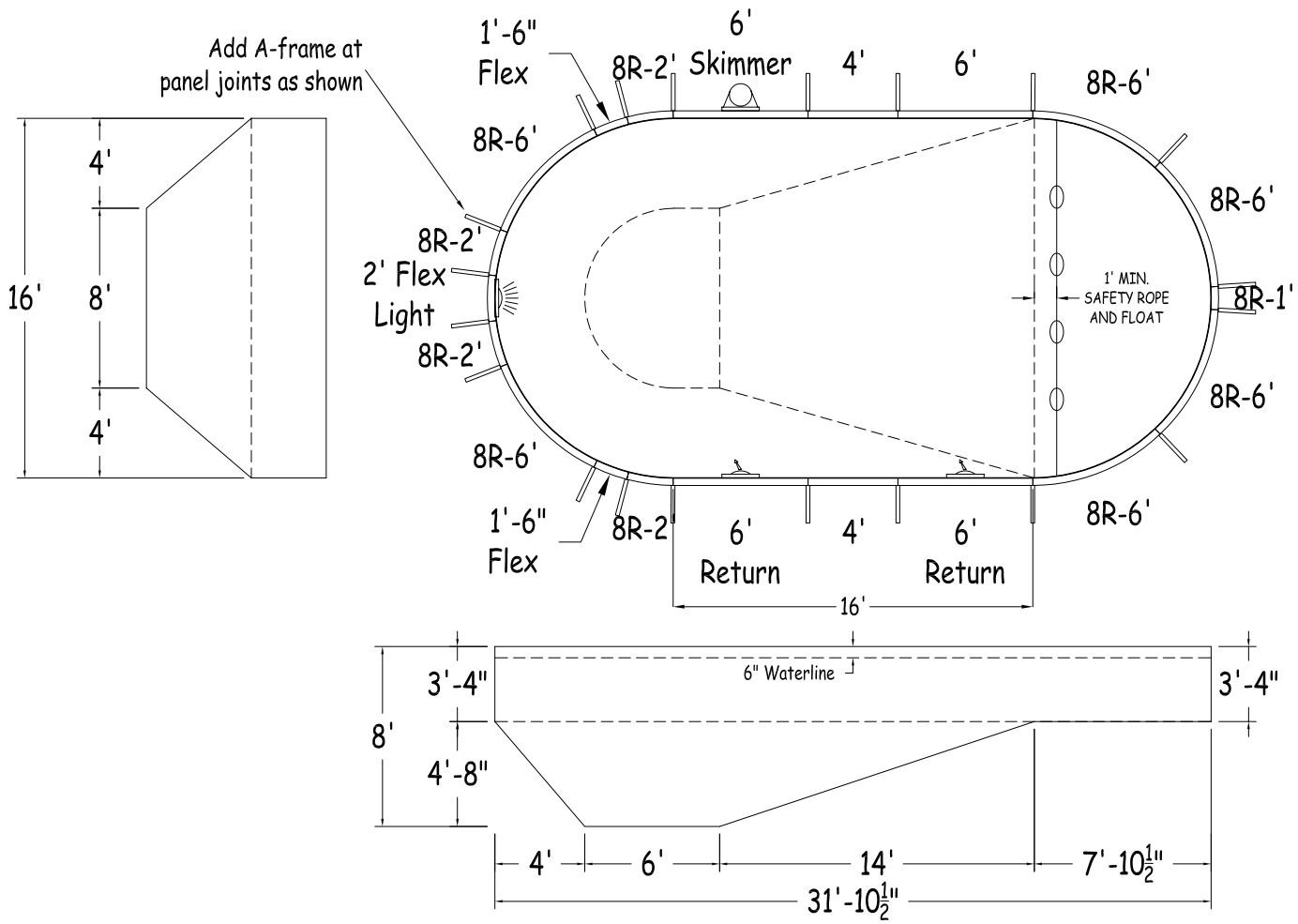

Steps Position

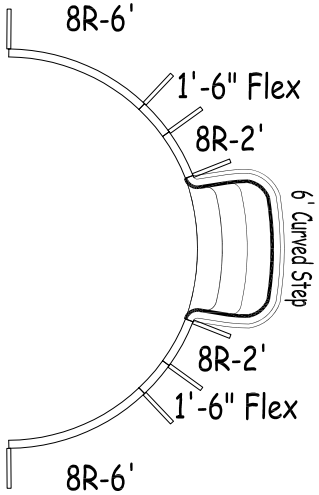

Step Option 1

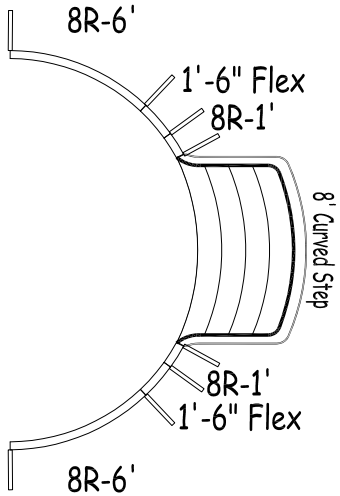

Step Option 2

Equator® A World of Pool Products

OVAL 16-0 X 31-11

42" STEEL PANELS	PERIMETER:	82'	VOLUME (US Gal):	16 600
DWG #: EQOV00S1632-12	AREA (SqFt):	455	VOLUME (Litres):	62 700
	LINER AREA (SqFt):	511	DATE:	01/Jan/2012
PART# : EQOV00S1632	SAFETY COVER (SqFt):	663	SCALE:	1/8" = 1'-0"

Feet First™

DIVING/SLIDING EQUIPMENT SHALL BE DESIGNED FOR SWIMMING POOLS AND SHALL BE INSTALLED IN ACCORDANCE WITH THE DIVING/SLIDING EQUIPMENT MANUFACTURER'S SPECIFICATIONS. PLEASE CONTACT THE DIVING/SLIDING EQUIPMENT MANUFACTURER FOR THEIR SPECIFICATIONS.

MEETS DEPTH AND SHAPE MINIMUM STANDARD ANSI/NSPI5-2003

OVAL

Center To Center	
1 To 2	15'-10 1/2"
Diagonals	
S1 To S2	16'
H1 To H2	16'
H2 To S1	21'-3"
H1 To S2	21'-3"
3 To 4	16'
3 To 5	22'-7 1/2"
4 To 6	22'-7 1/2"
5 To 6	16'

2012

Part number	Description	Qty (No Step)	Qty (Option 1)	Qty (Option 2)
ST0720001X	6' Straight Plain	1	1	1
ST0720001*	6' Straight Skimmer	1	1	1
ST0720001*	6' Straight Return	2	2	2
ST0480001X	4' Straight Plain	2	2	2
RA0720961X	8R-6' Plain	6	4	4
RA0240960X	8R-2' Plain	4	6	4
RA0120960X	8R-1' Plain	1	-	2
RA018FLX0X	1'-6"' Flex Plain	2	4	4
RA024FLX0*	2' Flex Light	1	1	1
XXX-XXX	Panel Brace	20	22	22
IPC-HDWSTRT150	Hardware, Straight 150 Pack	2	2	2
IPC-STKPK25	Rebar Stake, 18" 25 Pack	2	2	2
	6ft Curved Step	-	1	-
	8ft Curved Step	-	-	1

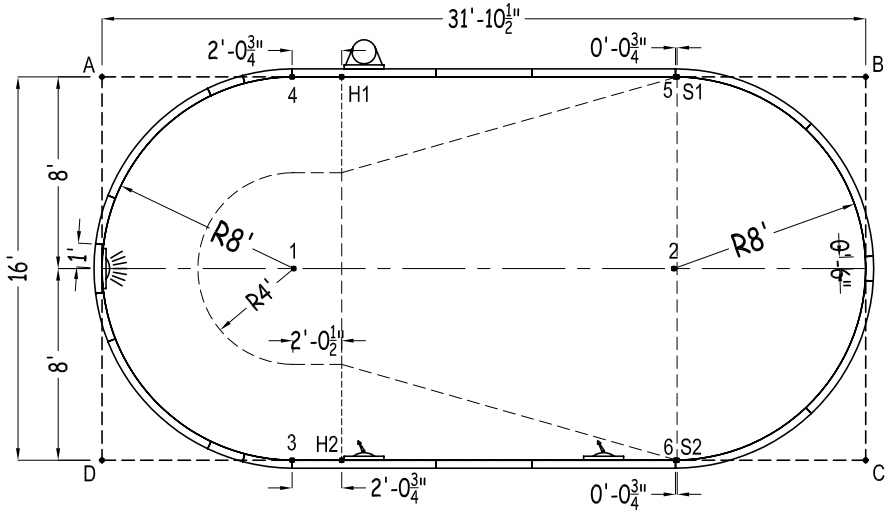

	A	B	C	D
1	11'-3 3/4"	25'-2"	25'-2"	11'-3 3/4"
2	25'-2"	11'-3 3/4"	11'-3 3/4"	25'-2"
3	17'-10 1/4"	28'-9 1/2"	23'-11 1/4"	7'-11 1/4"
4	7'-11 1/4"	23'-11 1/4"	28'-9 1/2"	17'-10 1/4"
5	23'-11 1/4"	7'-11 1/4"	17'-10 1/4"	28'-9 1/2"
6	28'-9 1/2"	17'-10 1/4"	7'-11 1/4"	23'-11 1/4"
H1	10'	21'-10 1/2"	27'-1 1/4"	18'-10 1/2"
H2	18'-10 1/2"	27'-1 1/4"	21'-10 1/2"	10'
S1	24'	7'-10 1/2"	17'-10"	28'-10"
S2	28'-10"	17'-10"	7'-10 1/2"	24'
A	-	31'-10 1/2"	35'-8"	16'